Box Header 1.27mmX1.27mm(0.050"X0.050")

GXCON

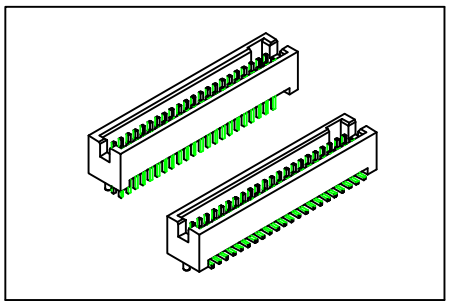

Material:

Housing: High temperature housing withstands IR and VPR soldering methods.
Contacts: Brass.
Plating: Gold plated over nickel.
Tin plated over nickel.
Selective gold plated: Gold plated on mating area and tin plated on solder tail.

Electrical Characteristics:

Current Rating: 1 AMP.
Insulator Resistance: 5000MΩmin. at DC 500V.
Contact Resistance: 20mΩmax. at DC 100mA.
Operating Temperature: −65°C~+125°C.
Max Processing Temperature: 230°C for 30~60 seconds.

Features:

* Choice of through-hole and surface mount.
* Fully shrouded offers excellent protection.
* Choice of two different dip length.
* Choice of alignment post or Board lock options.

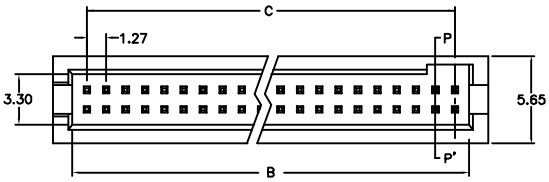

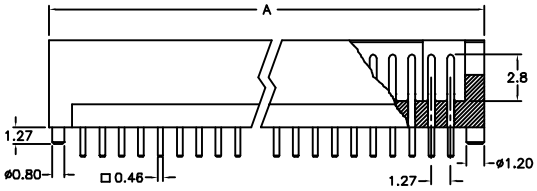

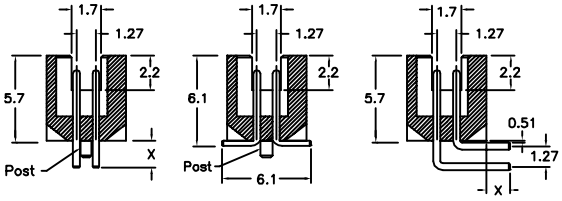

Section P–P'
Dip Type

Section P–P'
S.M.D Type

Section P–P'
R.A. Type

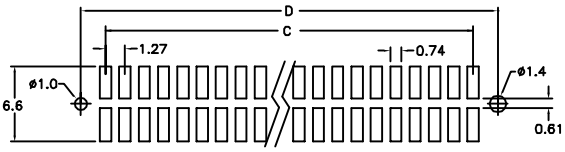

P.C. Board Layout

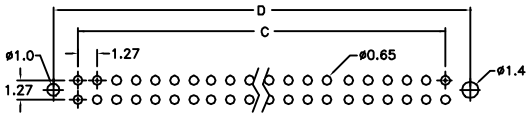

P.C. Board Layout

X	1	2	3
Length	3.05	1.91	2.30
Position / Dimension	10 Thru 100		
A	1.27 X No. of Positions /2+3.18		
B	1.27 X No. of Positions /2+0.64		
C	1.27 X No. of Positions /2−1.27		
D	1.27 X No. of Positions /2+1.91		

Ordering information

BX21−	100	1	1	P	1
Series	No. of Pin Count	3: Selective Gold Plated 1: Gold Plated	1: Straight 3: Surface mount 2: Right Angle	*P: With Post *N: Without Post *L: With Board Lock	**1: 3.05mm **2: 1.91mm **3: 2.30mm

PDF 文件使用 "pdfFactory Pro" 试用版本创建 www.fineprint.cn